安森克
ANSINKE

PART NO: EPVB075

ISSUED DATE: 2025-11-25

Proposed by			Customers' Approval
Designed by	Checked by	Approved by	

The information contained herein is the exclusive property of Ansenke Electronics, and shall not be distributed, reproduced, or disclosed in whole or in part without prior written permission of Ansenke(Shenzhen) Electronics CO.,LTD.

1. Appearance

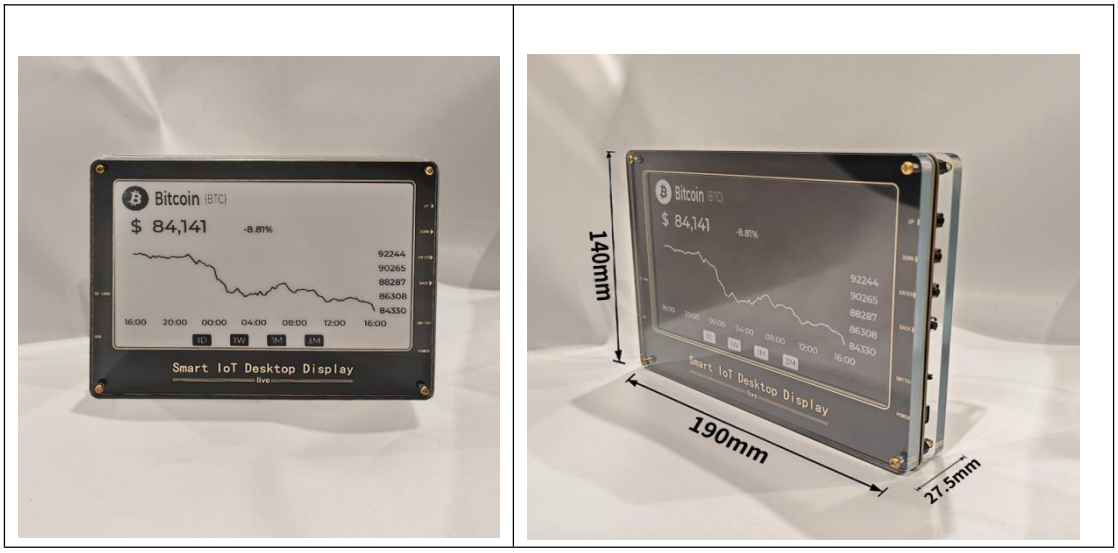

2. Schematic and PCB Diagram

2.1 Schematic Diagram

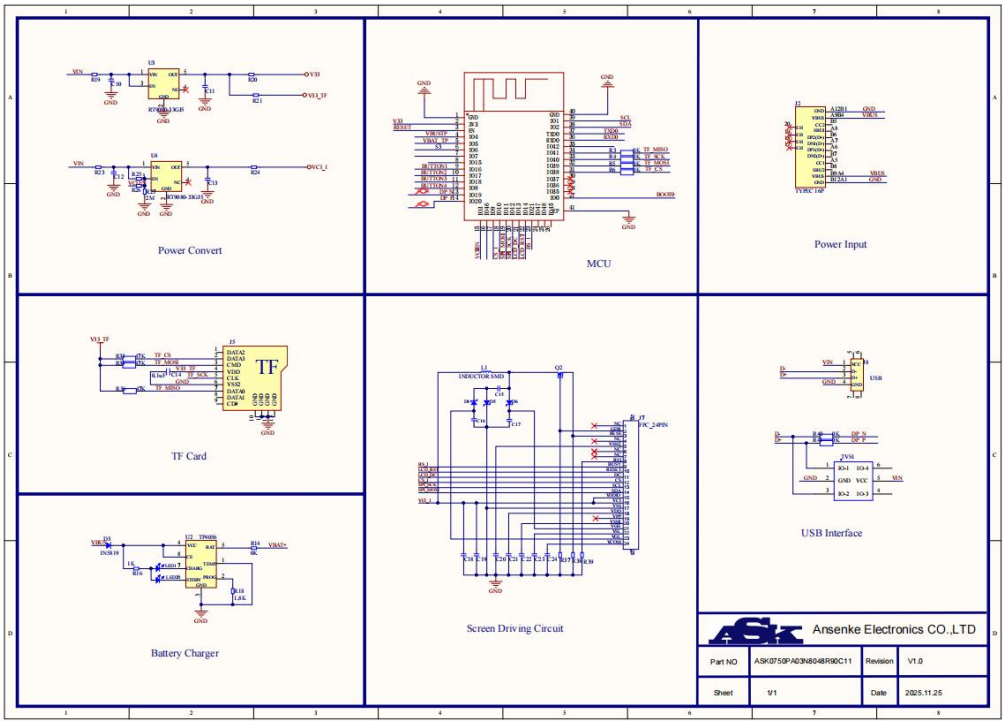

The information contained herein is the exclusive property of Ansenke Electronics, and shall not be distributed, reproduced, or disclosed in whole or in part without prior written permission of Ansenke(Shenzhen) Electronics CO.,LTD.

2.2 PCB diagram

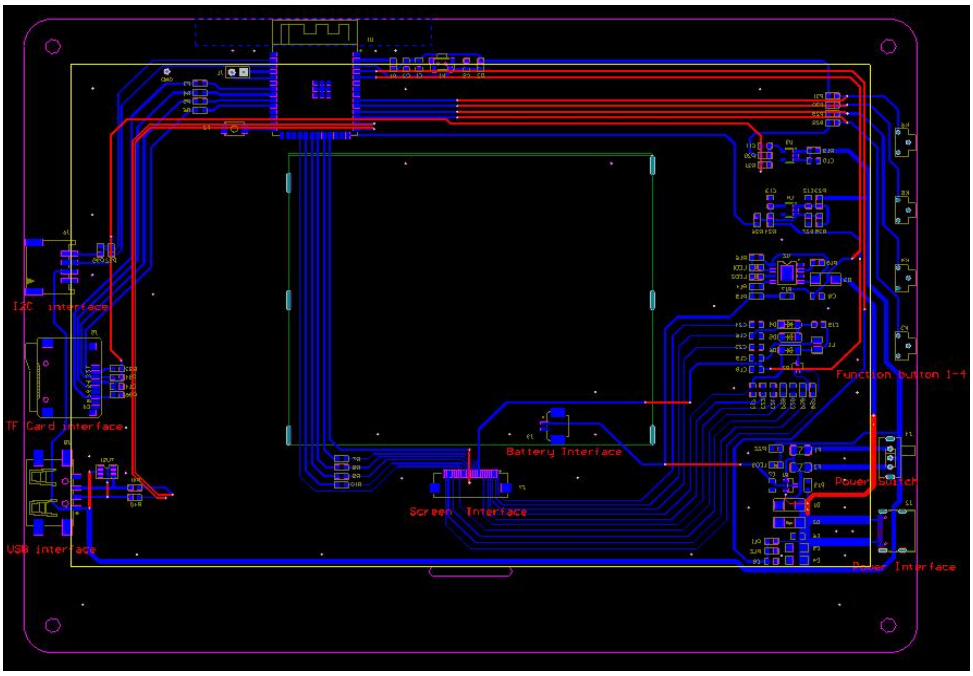

3. Functional Interface diagram

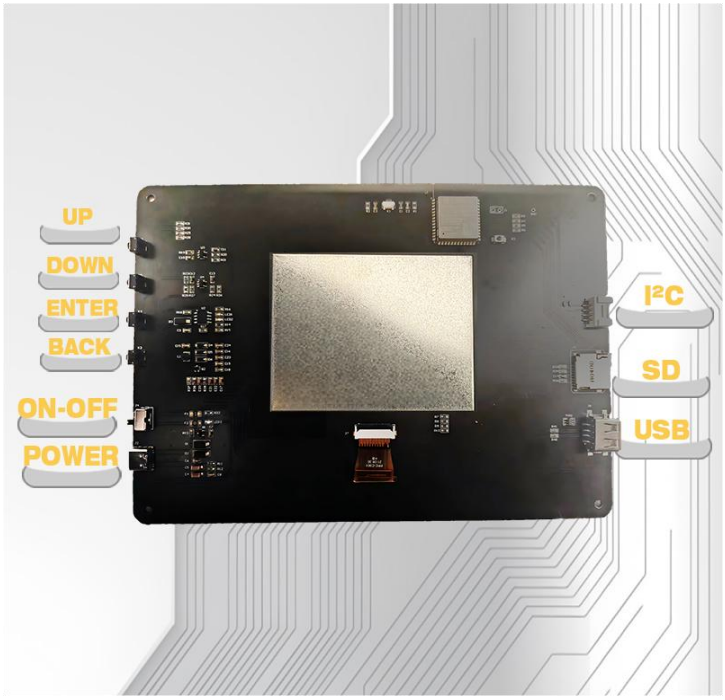

The information contained herein is the exclusive property of Ansenke Electronics, and shall not be distributed, reproduced, or disclosed in whole or in part without prior written permission of Ansenke(Shenzhen) Electronics CO.,LTD.

4. Outline Dimension

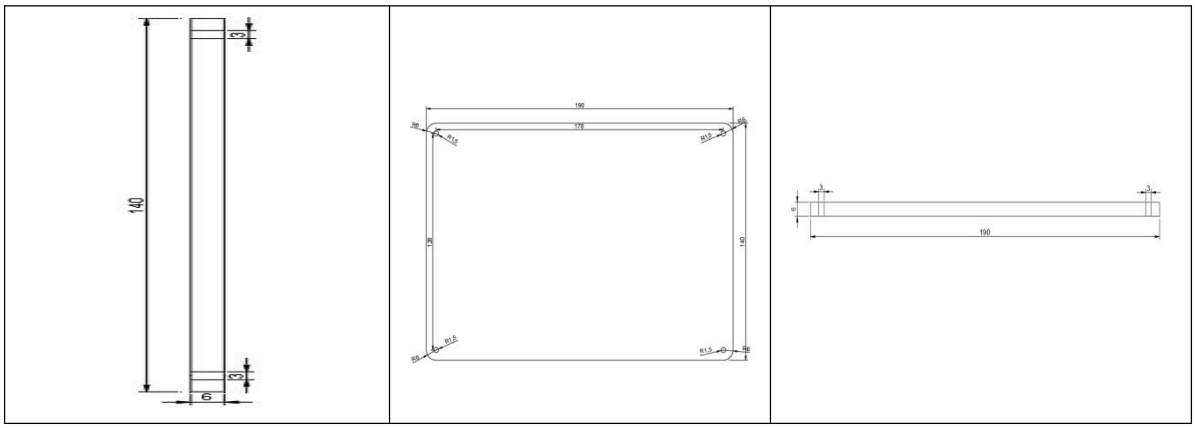

The information contained herein is the exclusive property of Ansenke Electronics, and shall not be distributed, reproduced, or disclosed in whole or in part without prior written permission of Ansenke(Shenzhen) Electronics CO.,LTD.

5. Technical Specification

Display	Display Type	7.5 inch
	Type	EPD
	Resolution	800*480
	Pixel Pitch	0.204×0.204
	Dimensions	170.2(W)×111.2(H)×1.20(D)
	Active area	165.2(H)×97.92(V)
I/O Port	USB	USB 2.0×1
Button	UP	Move upward
	DOWN	Move downward
	ENTER	Confirm function
	Back	Return to the previous
DC Characteristics	Power supply	DC 5V
	Typical Power	49.5 mW
	Battery Working Life	5 years
Environment	Operating Temp	0-40℃
	Storage Temp	-25-60℃
Physical Characteristics	Machine size	190(mm)×140(mm)×27.5 (mm)
	Gross weight(g)	1290g
	Package size	280x200x70mm

The information contained herein is the exclusive property of Ansenke Electronics, and shall not be distributed, reproduced, or disclosed in whole or in part without prior written permission of Ansenke(Shenzhen) Electronics CO.,LTD.

6. Technical Drawings of the inner EPD panel

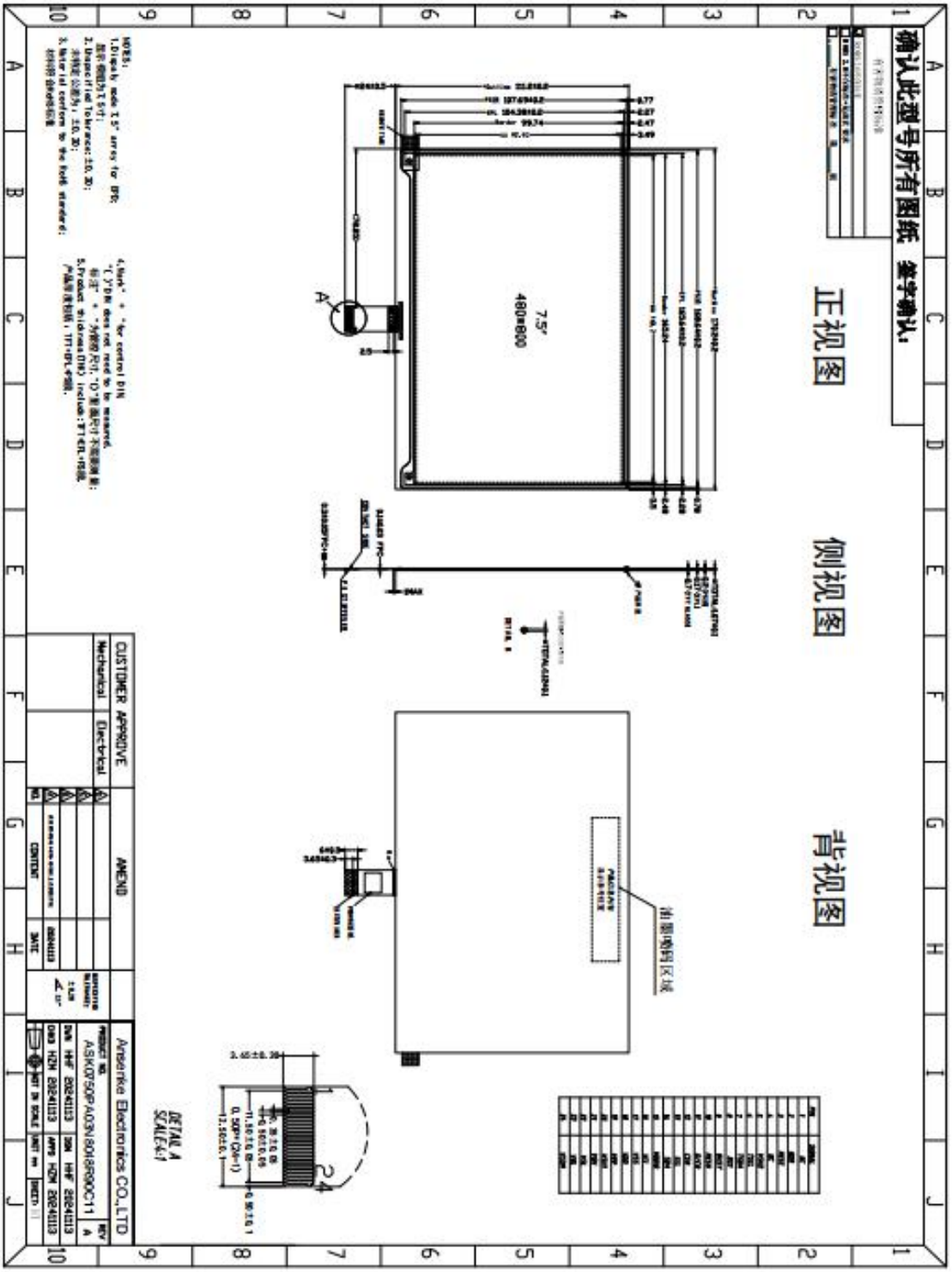

The information contained herein is the exclusive property of Ansenke Electronics, and shall not be distributed, reproduced, or disclosed in whole or in part without prior written permission of Ansenke(Shenzhen) Electronics CO.,LTD.